AMANO McGANN

AMI-1200 Series

Universal Barrier Gate

The AMI-1200 Series Universal Barrier Gate is designed to control vehicles in both attended and unattended parking traffic lanes by means of a straight or folding aluminum gate arm. The on-board microprocessor provides flexible lane logic, control and functionality and supports three switch-selectable modes of operation to meet the needs of customer applications.

Features

- Two versions are available to meet the needs of various customer configurations
- Models include left-hand (standard) or right-hand gate arm position
- DC direct drive motor minimizes gate arm droop
- Selectable "auto-up" or "auto-down" on power failure feature utilizing 12V battery
- Standard "extra-sensory" safety feature
- Able to store successive inputs for multi-vend applications
- Built-in detector harness supports two vehicle loop detectors for control of up to three loops
- One duplex 110V AC service convenience outlet
- Pedestal footprint design allows direct replacement of AGP and AMG gates
- Upper mechanism plate rotates in three directions independently of the pedestal for site-specific placement of the service access door
- Optional thermostatically controlled heater for extreme cold conditions

AMI-1200 Series

Universal Barrier Gate

CURB DIMENSIONS

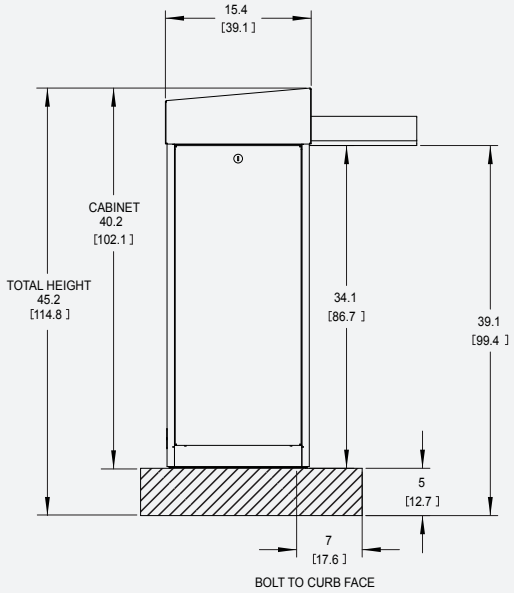

BOLT LAYOUT

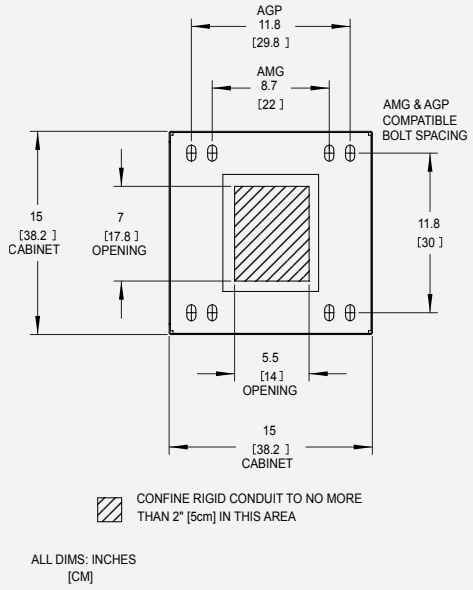

SPECIFICATIONS

ELECTRICAL

Service amps:	120 VAC, 50/60 Hz, 15 AMPS
Connections:	One duplex utility power outlet, main power field box, main power switch with built-in circuit breaker

MOTOR CHARACTERISTICS

High Torque Motor:	1/6 Hp DC direct drive gear motor
Speed:	3600 RPM
Starting amps:	15A (120V)
Running amps:	6A RMS (120V) (with heater)
Brush Life:	3-million gate cycles

GEARBOX CHARACTERISTICS

Gear Ratio:	111:1
Torque Rating:	644 in-lbs.

GATE ARM CHARACTERISTICS

Height:	34" (86 cm) in down position from bottom of cabinet
Length:	AL35 (LH): 11', (323 cm) – folding gate arm – aluminum AL40 (RH): 11', (323 cm) – folding gate arm – aluminum AL12: 12', (365 cm) – aluminum

ENVIRONMENTAL

Temperature:	0°F to 122°F; -22°F with heater option
Humidity:	10% to 90% humidity (non-condensing)

CABINET

Heavy-duty, 14-gauge all weather steel construction

Direct replacement footprint for other Amano McGann gates

Dimensions:	40.2" H x 15.4" W x 15.4" D (102.11 cm x 39.12 cm x 39.12 cm)
Access:	Removable hood on drive mechanism (360° access) Removable door with keyed latching lock
Finish (Standard):	White (RAL9010), OPUS and Overture Gray (RAL7022), AMG Gray Classic, Custom colors available

MICROPROCESSOR-BASED CONTROLLER

Gate up/normal/down switch (internal manual override)

Two built-in detector sockets will accept single channel (EOE-122510) or dual channel (EOE-122520) vehicle detectors to support a maximum of three loops. One dual detector included.

Operational Modes:	Free way, one way, two way
Switch Selectable Features:	"Extra sensory" timer, closing loop safety "auto stop", backout timer, backout mode, power fail arm position and multi-vend

Versions

	AMI-1210/XX2 Online Version	**AMI-1210/XX3 Integrated Field Connect Board Version**
Designed for:	OPUSeries and Universal Reader Series	AMG Series, Overture, and readers that utilize the MT-280 board
Communi-cations:	Serial to IO100	Dry contact I/O
Heater:	Optional kit	Optional kit
Field connect board:	Optional kit	Included
Digital I/O:	Yes	No
Analog I/O:	No	Yes

Manufactured by Amano McGann, Inc.
Specifications are approximate and are subject to change without notice.

2699 Patton Road ⋮ Roseville, MN 55113 ⋮ Tel: (612) 331-2020 ⋮ www.amanomcgann.com
Amano McGann Canada, Inc. ⋮ 3210 Swansea Cres., Unit 6A ⋮ Ottawa, ON K1G 3W4 Canada ⋮ 1-877-408-6776

AMANO McGANN

©2017 Amano McGann, Inc. RCS 07/17